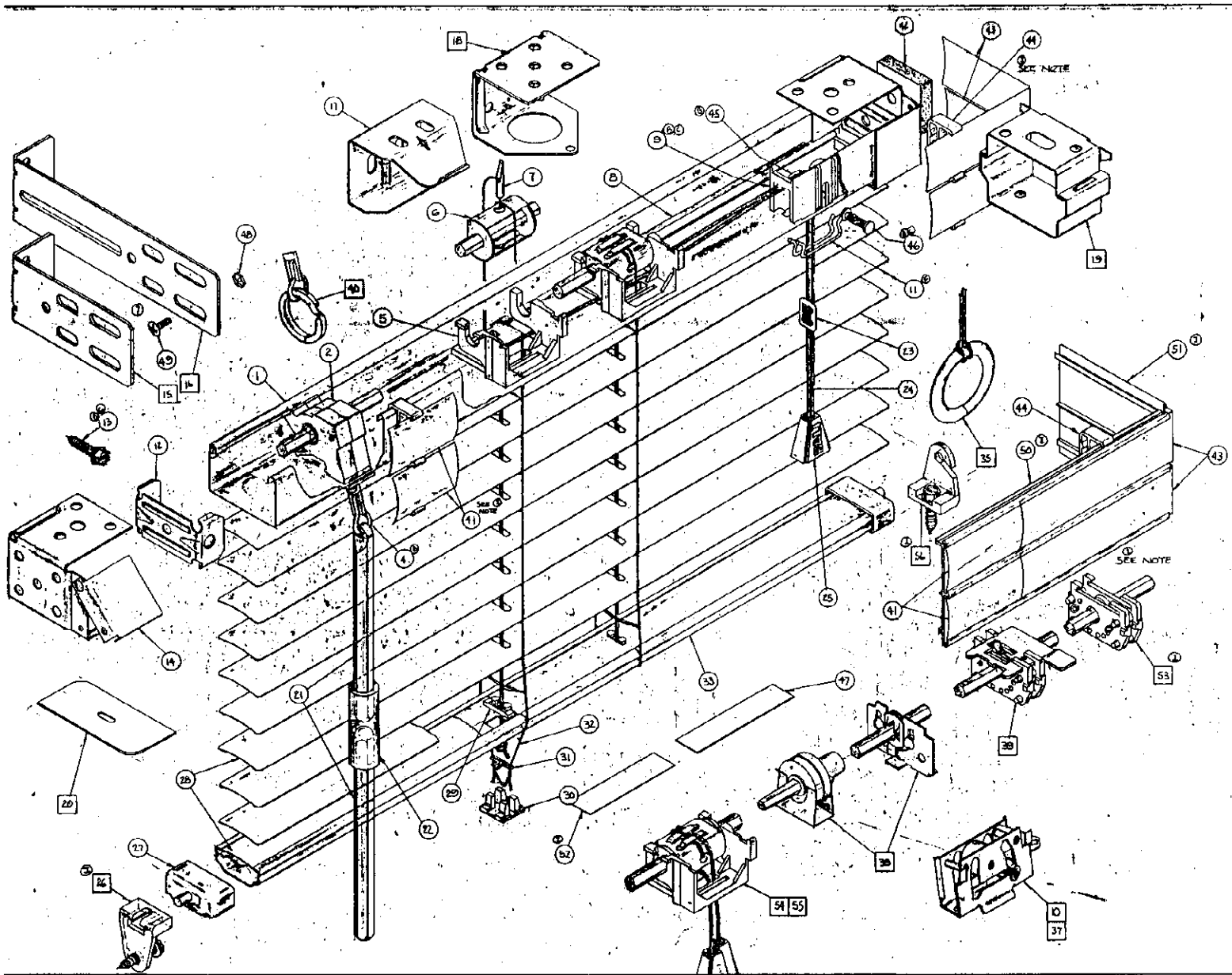

	BILL of MATERIALS			
ITEM	DWG. No.	PART No.	DESCRIPTION	MAT'L
1	B-50160	10014-XXXX	HEADRAIL	STEEL
2		00455-XXX	TILTER ASSEMBLY - WAND TYPE	PLASTIC
3				PLASTIC
4	B-50131	15162-0000	SPRING CLIP	STEEL
5	B-50052	13047-XXXX	TILT ROD SUPPORT - SNAP IN	PLASTIC
6	B-50092	01701-000	TAPE DRUM - HEX	STEEL
7	A-50172	13031-0000	TAPE CLIP	STEEL
8	B-50081	16081-0000	HEX TILT ROD	STEEL
9	C-50157	13138-XXXX	CORD LOCK UNIVERSAL	PLASTIC
10		15100-0000	TOP LOCKING CORD LOCK ASSY-SNAP IN R.H.	
		15102-0000	TOP LOCKING CORD LOCK ASSY-SNAP IN-L.H.	
11	B-50328	10013-0000	CORD SEPARATOR	STEEL
12	B-50338	10000-0000	HEAD RAIL END STIFFENER	STEEL
13	B-50166	01285-0000	8-32 Self Tapping Hex Head Screw	STEEL
14	B-50321	10875-XXXX	HINGED END SUPPORT BRKT (FASKA - L.H.	STEEL
		10876-XXXX	HINGED END SUPPORT BRKT (FASKA - R.H.	STEEL
15	B-50205	15012-0000	SHORT EXTENSION BRKT.	STEEL
16	B-50205	15002-0000	LONG EXTENSION BRKT.	STEEL
17	A-50885	15132-0000	HEAD RAIL INTERMEDIATE SUPPORT	STEEL
18	C-50283	12643-0000	INTERMEDIATE SUPPORT BRKT.	STEEL
19	B-50330	10029-0000	REVEAL INSTALLATION BRKT	STEEL
20	A-50460	01495-0000	TURN CLIP MOUNTING BRKT	STEEL
21	C-50215	15131-XXXX	WAND TILTER OPERATING ROD	PLASTIC
22	A-50280	13128-XXXX	OPERATING ROD COUPLING	PLASTIC
23	A-50287	15107-0000	CORD EQUALIZER	STEEL
24		22557-XXXX	LIFT CORD 1.8mm - DURALINE CORD	
25	A-50297	00340-XXXX	TASSEL	PLASTIC
26	B-50459	03126-0000	UNIV. HOLD DOWN BRKT - UNSLOTTED	"
27	A-50301	10086-XXXX	BOTTOM RAIL END CAP	PLASTIC
28	C-50372	10069-XXXX	SLAT	ALUM.
29	A-50293	22539-XXXX	BOTTOM RAIL LIFT CORD RETAINER	PLASTIC
30	B-50344	10038-XXXX	TAPE RETAINER	PLASTIC
31	A-50302	10064-0000	BOTTOM RAIL TAPE RETAINER CLIP	STEEL
32		22526-XXXX	BRAIDED LADDER	
33	B-50153	10040-XXXX	BOTTOM RAIL	STEEL
34				
35	B-50324	15128-0000	PULL RING	STEEL
36				
37		03856-0000	CORD LOCK, UNIVERSAL, STEEL	
38	B-50090	15090-0000	DUAL TILT CLUTCH ASSY. (LIMIT TILT OUT OUT	
39	C-50170	15181-0000	LIMITED TILT CONTROL ASSY - SOLAR	
40	B-50032	12042-0000	SPLIT RING. KR 30/72 1/2" I.D.	STEEL
41	A-50040	10069-XXXX	VALANCE SLAT FACE	ALUM.
42	B-50042	21022-0000	VALANCE TAB	
43	A-50041	13218-XXXX	VALANCE SLAT RETURN	ALUM.
44	Q-50211	19201-XXXX	VALANCE CLIP	PLASTIC
45	B-50365		CORD LOCK COLLAR-MACHINE INSTALLED	STEEL
46	A-50440	01202-0000	RIVET - DOUBLE HEADED	STEEL
47		00658-0000	STANDARD BALI BOTTOMRAIL DECAL	
48		14087-0000	NUT #6-32	
49		14086-0000	BOLT #6-32 x 3/8	
50	B-50375	01826-000	DELUXE VALANCE CHANNEL	PLASTIC
51	B-50490	04281-000	" " CURL RETURN	"
52		01478-000	BOTTOMRAIL WARNING DECAL	
53	B-50119	15192-000	LIMITED TILT CONTROL	
54	A-50492	03428-000	CORD TILTER ASSY - OVER 60" NO DROP	
55	"	03429-000	" " " - UP TO 60" " " "	
56	B-50459	04323-000	UNIV. HOLD DOWN BRKT. SLOTTED	PLASTIC

NOTE: 1. DELUXE VALANCE IS STANDARD FEATURE FOR RETAIL BLINDS
2. DELUXE VALANCE & STANDARD VALANCE IS AN OPTIONAL FEATURE FOR CONTRACT BLINDS

☐ = CUSTOMER OPTION

Carey-McFall

DESCRIPTION: BALI CLASSIC BLIND ASSEMBLY

DRAWN: Kage | DATE: 12-12-85 | SCALE: 1-1 | DRAWING NO. D-50366